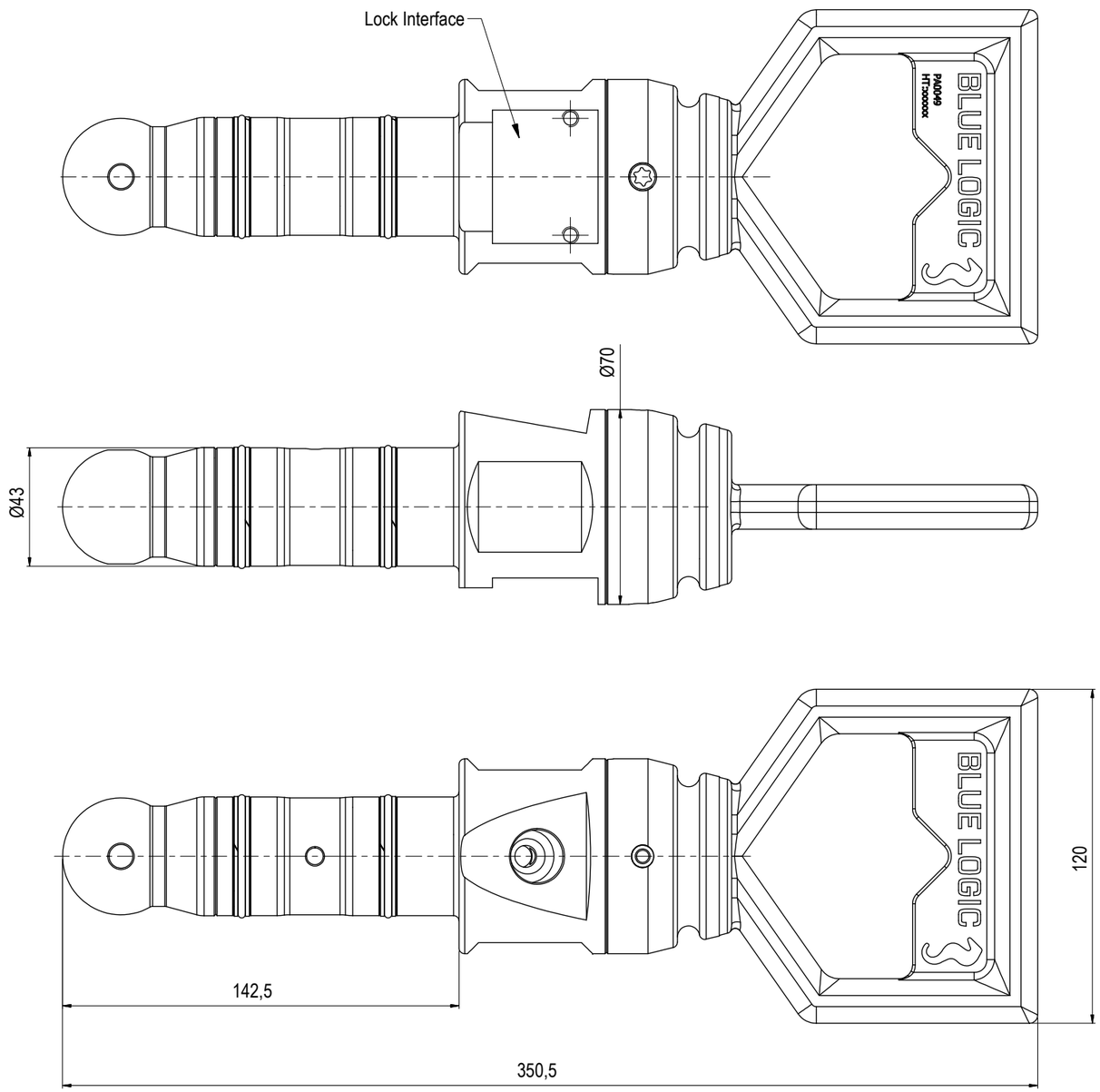

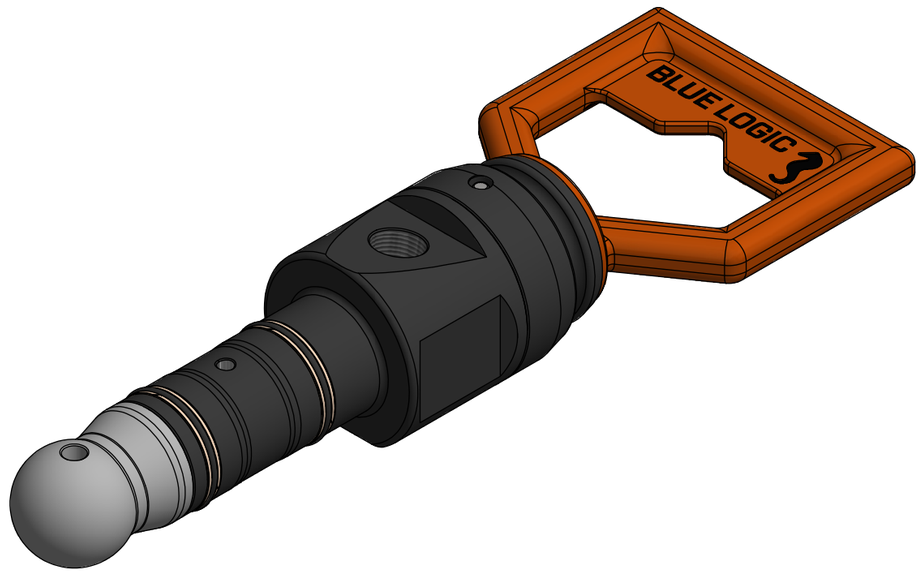

NOTE: 1
DESIGN CODE:
API 17H
Type 1

NOTE: 2
TECHNICAL CLASSIFICATION:

Article Type:	001-Hot Stabs
Main Group:	1.03. Ø43 Hot Stab
Intermediate Group:	1.2.01. Stab
Sub Group:	1.2.5.01. Single

NOTE: 3
INTERFACE INFORMATION:

Pressure Rating Bar:	1380
Material:	Long-term
Weight:	3,5 kg
Volume:	0,57 dm^3
Surface Area:	1149 cm^2
Hydraulic:	9/16" MP
Mechanical:	N/A
Electrical:	N/A
Com. & Protocol:	N/A

Rev.	Date	Reason for issue	Revision change	Made	Chk'd	Appr.
02	8.1.2026	9-IFU (Issued for Use)		WTJ	HNJ	WTJ
01	29.11.2021	9-IFU (Issued for Use)		WTJ	HNJ	WTJ

BLUE LOGIC

This Drawing is the Property of Blue Logic AS © and must Not be Loaned, Reproduced or Transferred to others without written Permission

Dwg Scale: NTS
Dwg Proj:
Dwg Format: A3

Drawing title: Ø43 SP Stab 20k Long-term MP 9/16"

Drawing number: BB5338

Rev. 02